REVISIONS			
REV.	DESCRIPTION	APPR	DATE
1			
2			

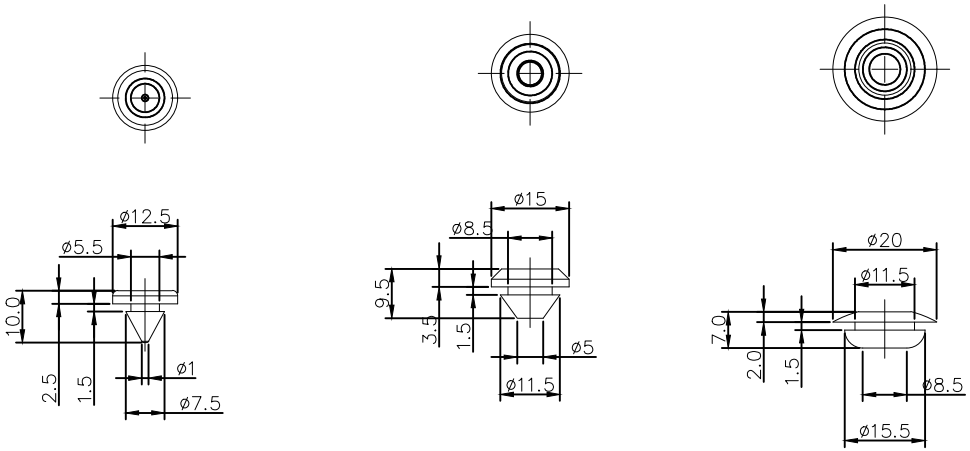

CB2-6 CB2-9 CB2-12

MATERIAL	RUBBER	Drawn	
FINISH	BK	Checked	
SCALE	1 : 1	Designed	
UNITE	mm	Approved	
MODEL NAME	샤시발	Title	MS-CB2

신은하드웨어