REVISIONS			
REV.	DESCRIPTION	APPR	DATE
1			
2			

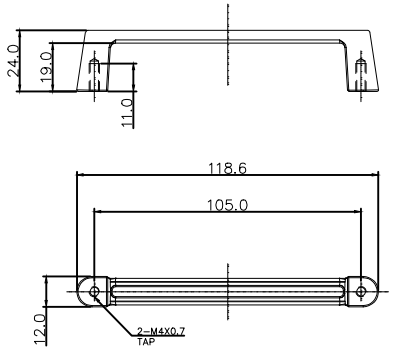

MATERIAL	아연합금(ZDC)	Drawn	
FINISH	CV / CR / BK	Checked	
SCALE	1 : 1	Designed	
UNITE	mm	Approved	
MODEL NAME	캐스팅손잡이	Title	MS-C-101

신은하드웨어

REVISIONS			
REV.	DESCRIPTION	APPR	DATE
1			
2			

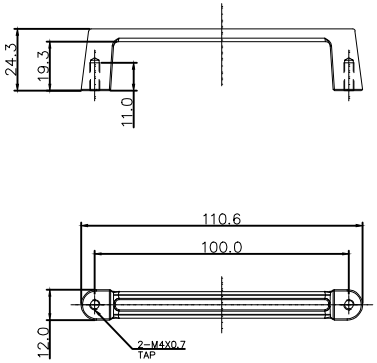

MATERIAL	아연합금(ZDC)	Drawn	
FINISH	CV / CR / BK	Checked	
SCALE	1 : 1	Designed	
UNITE	mm	Approved	
MODEL NAME	캐스팅손잡이	Title	MS-C-102

신은하드웨어

REVISIONS			
REV.	DESCRIPTION	APPR	DATE
1			
2			

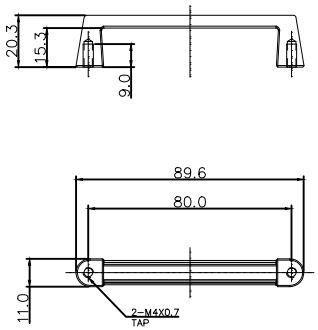

MATERIAL	아연합금(ZDC)	Drawn	
FINISH	CV / CR / BK	Checked	
SCALE	1 : 1	Designed	
UNITE	mm	Approved	
MODEL NAME	캐스팅손잡이	Title	MS-C-103

신은하드웨어

REVISIONS			
REV.	DESCRIPTION	APPR	DATE
1			
2			

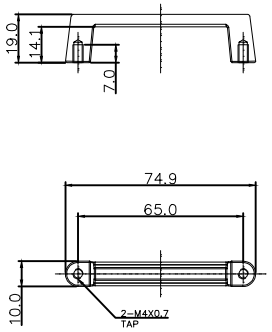

MATERIAL	아연합금(ZDC)	Drawn	
FINISH	CV / CR / BK	Checked	
SCALE	1 : 1	Designed	
UNITE	mm	Approved	
MODEL NAME	캐스팅손잡이	Title	MS-C-104

신은하드웨어