| REVISIONS | | | |
|---|---|---|---|
| REV. | DESCRIPTION | APPR | DATE |
| 1 | | | |
| 2 | | | |

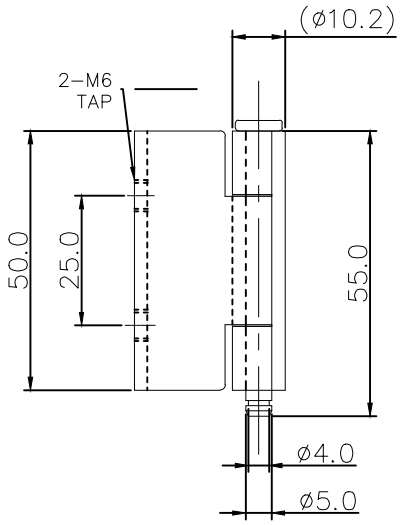


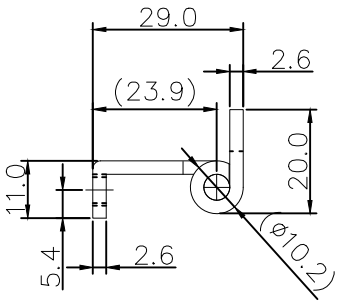


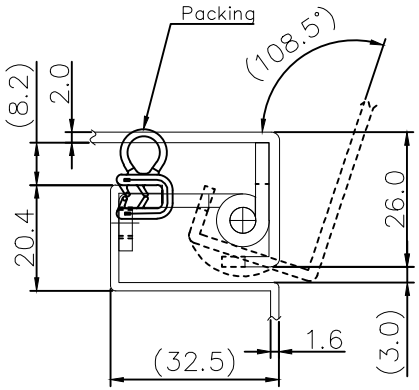


(사용예,참고용)

| | | | |
|---|---|---|---|
| MATERIAL | 철(SS) | Drawn | |
| FINISH | 백색아연도금 | Checked | |
| SCALE | 1 : 1 | Designed | |
| UNITE | mm | Approved | |
| MODEL NAME | 철힌지 | Title | MS-BS-04-E |

신은하드웨어