REVISIONS			
REV.	DESCRIPTION	APPR	DATE
1			
2			

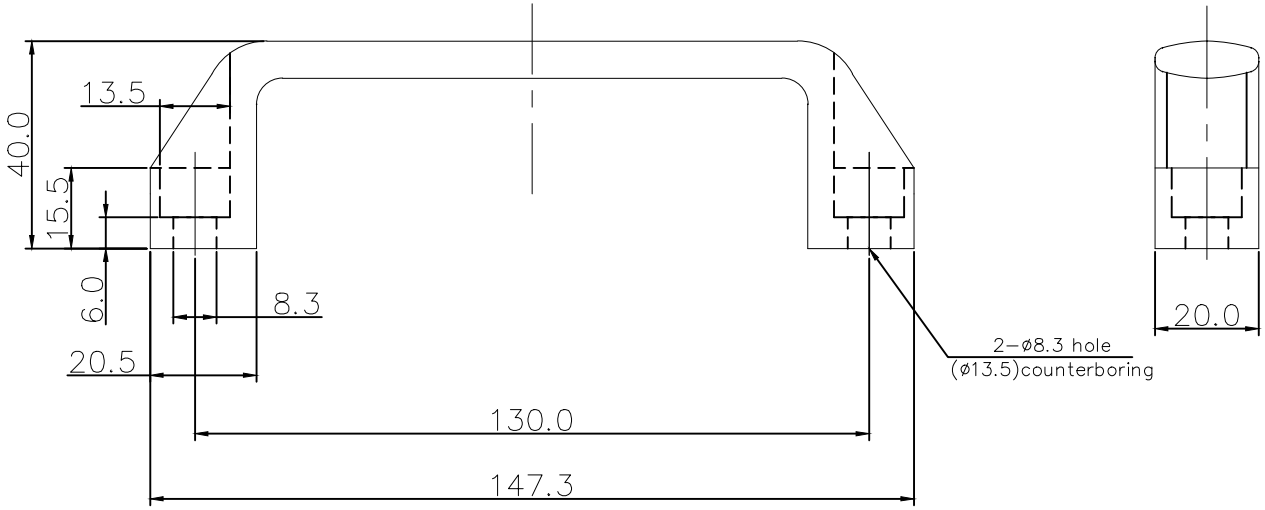

MATERIAL	스텐(SUS304)	Drawn	
FINISH	광택연마	Checked	
SCALE	1 : 1	Designed	
UNITE	mm	Approved	
MODEL NAME	스텐손잡이	Title	MS-C-9S

신은하드웨어