REVISIONS			
REV.	DESCRIPTION	APPR	DATE
1			
2			

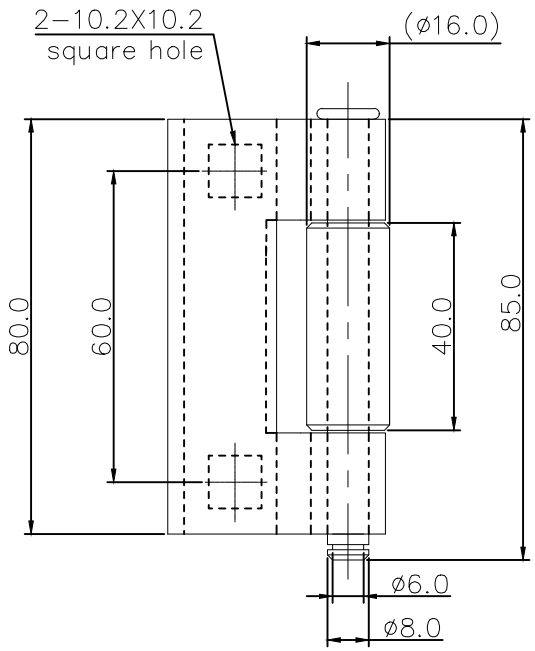

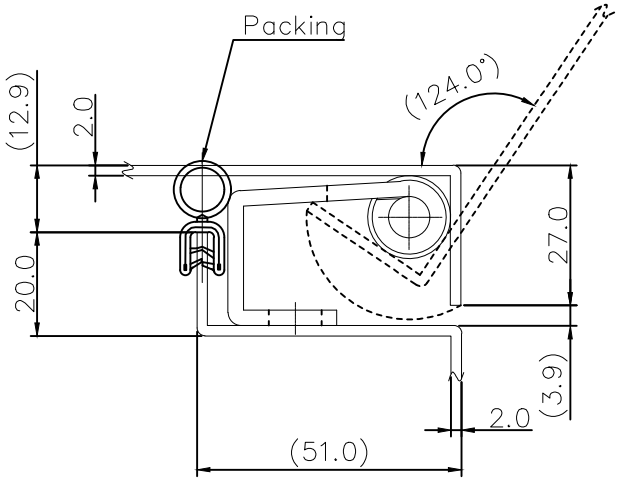

(사용예,참고용)

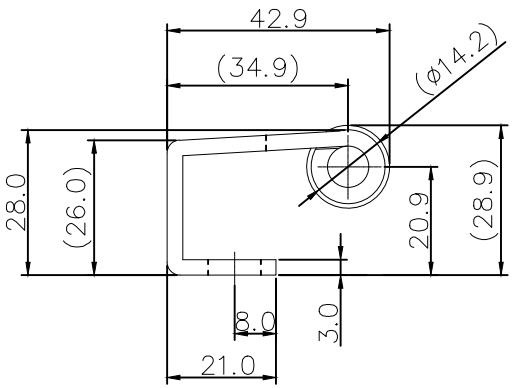

MATERIAL	스텐(SUS304)	Drawn	
FINISH	.	Checked	
SCALE	1 : 1	Designed	
UNITE	mm	Approved	
MODEL NAME	내부용힌지	Title	MS-SM-001S-E

신은하드웨어