REVISIONS			
REV.	DESCRIPTION	APPR	DATE
1			
2			

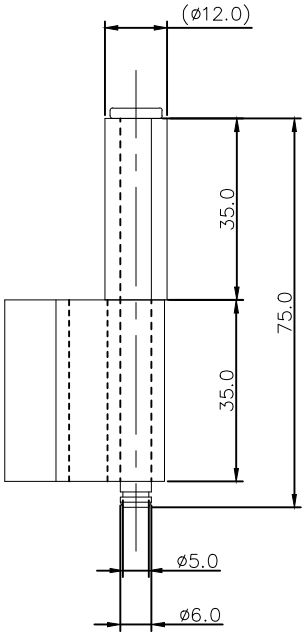

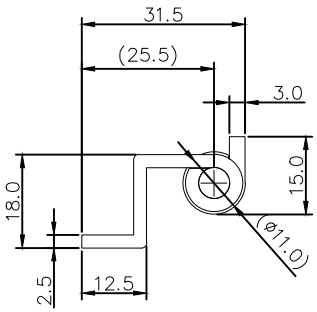

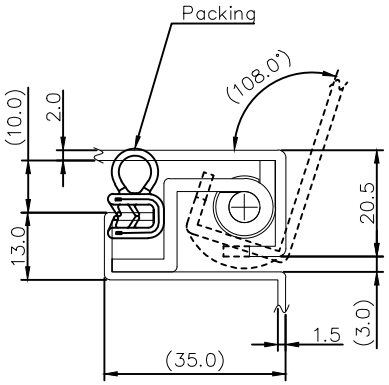

(사용예,참고용)

MATERIAL	스텐(SUS304)	Drawn	
FINISH	.	Checked	
SCALE	1 : 1	Designed	
UNITE	mm	Approved	
MODEL NAME	스텐힌지	Title	MS-Z-02S-E

신은하드웨어