REVISIONS			
REV.	DESCRIPTION	APPR	DATE
1			
2			

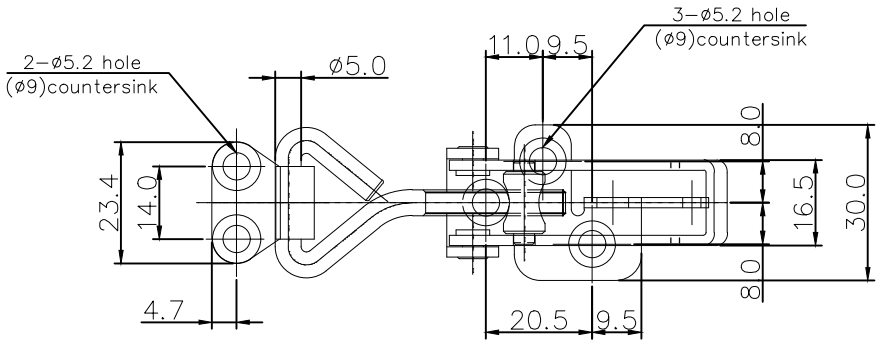

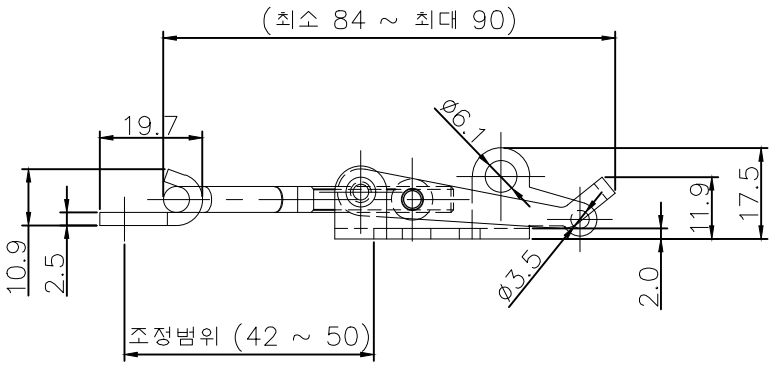

MATERIAL	스텐 (SUS304 / SUS316)	Drawn	
FINISH	바렐연마	Checked	
SCALE	1 : 1	Designed	
UNITE	mm	Approved	
MODEL NAME	조절식매미고리	Title	MS-1-85CS

신은하드웨어