REVISIONS			
REV.	DESCRIPTION	APPR	DATE
1			
2			

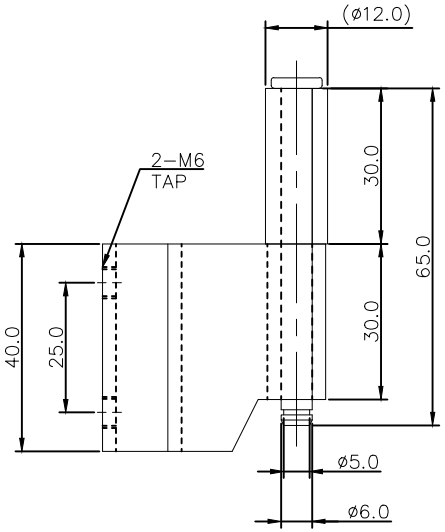

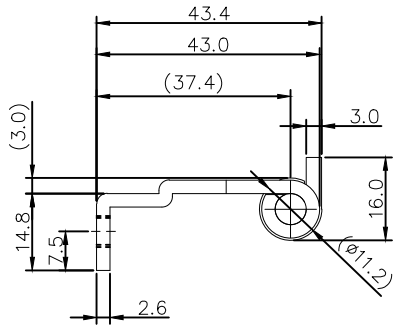

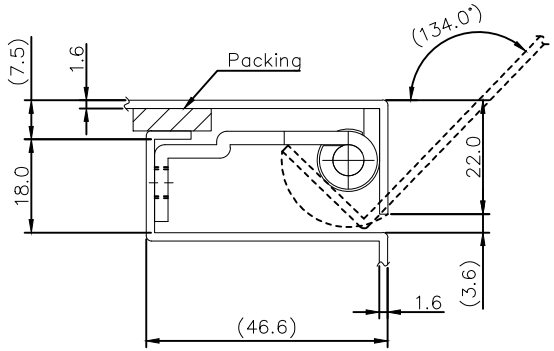

(사용예,참고용)

MATERIAL	철(SS)	Drawn	
FINISH	백색아연	Checked	
SCALE	1 : 1	Designed	
UNITE	mm	Approved	
MODEL NAME	내부용힌지	Title	MS-A-430-E

신은하드웨어