REVISIONS			
REV.	DESCRIPTION	APPR	DATE
1			
2			

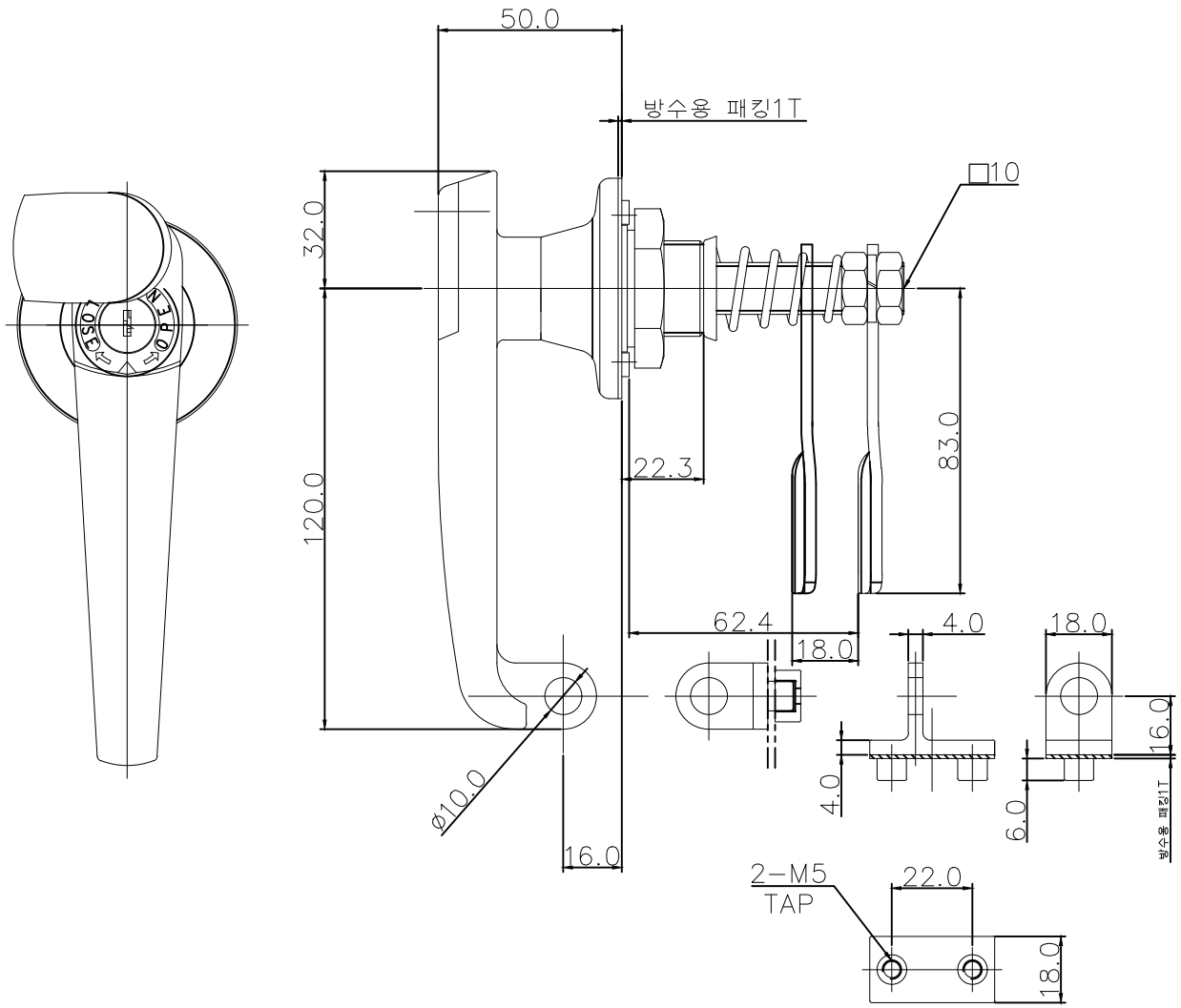

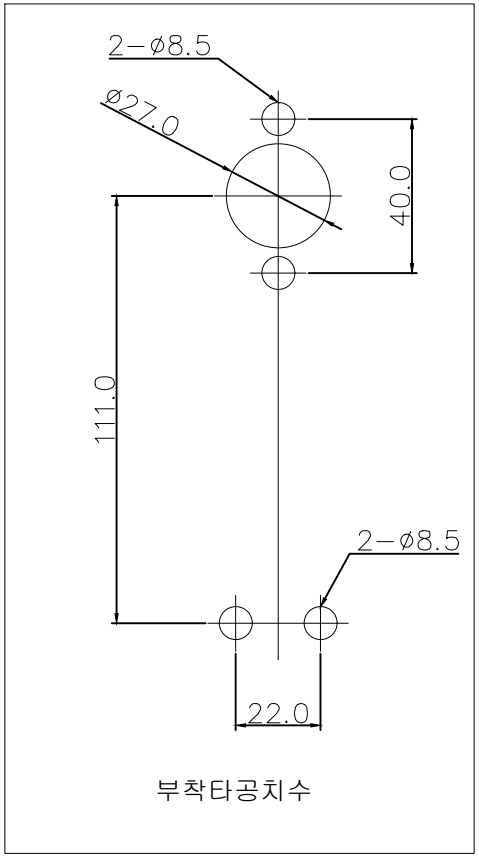

MATERIAL	아연합금(ZDC)	Drawn	
FINISH	CR	Checked	
SCALE	1 : 1	Designed	
UNITE	mm	Approved	
MODEL NAME	핸들	Title	MS-110W-1

신은하드웨어